The Story of Mariko and Yuki

This is the story of Mariko (まりこ) and Yuki (ゆき), two CASIO MD-120 Floppy Disk units in different states of disrepair.

Mariko (pictured right) began her final journey on Yahoo! Auctions Japan, paired with an AD-4175 but separated from her SB-5. She was listed—as is typical in Japan—as “ジャンク” (JUNK), a flexible term widely used in vintage electronics auctions. Yuki, meanwhile, began her journey in Burgundy, France. She was accompanied by an SB-5 and described as “almost working,” but was missing her AD-4175.



And so, they found their way to **Szczecin**, Poland—into the meticulous hands of to [Piotr Piątek] —hoping for a miracle.

Happily, this story has a bright ending: both units are now fully operational. Next, we’ll walk through the highlights of their remarkable journey back to good health.

(Right: Mariko and Yuki share a "sisters photo" basking in Szczecin after being declared fit for duty.)



Repair Log

Inspection of the units determined that the SB-5 was fully functional—a great relief. Between the two MD-120s, they presented a whole list of issues: fail to read, fail to write, and fail to format.

The original Matsushita EME-215CS drives, which rely on a 26-pin FFC ribbon cable with a 1.27mm pitch, were ubiquitous back in the day. They appeared across an array of 80s and 90s gear, including Yamaha synths (SY85, W5, W7, MDF2, QY300, PSR series), Korg workstations (X2, X3, X3R, i2, i3, i4S), Technics KN series keyboards, and various Toshiba, Epson, and Bondwell laptops.

Their rotational speed is set at 360 RPM—a specific detail that will become very important shortly.

Both belts were still in remarkably good condition, so neither required replacement. [1].

With the electronics operating within spec and no visible mechanical issues, the symptoms pointed toward an internal drive fault. Rather than embarking on an archaeological hunt for vintage spare parts, it was decided to replace the whole drive assembly.

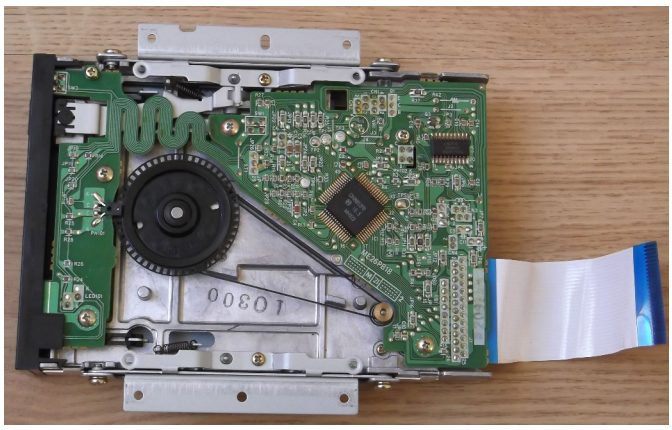

Right: Picture of one of the drive assemblies. Note the interesting features of this 40-year-old piece of technology:

- **Trace Design:** The PCB features a serpentine copper trace bridging two distinct sections. Its elongated path appears to provide mechanical compliance, allowing movement while maintaining electrical continuity between the left and right sides of the board.
- **Optical Tachometer:** Visible is a large tachometric disk featuring 53 holes paired with an optical sensor. The measured output frequency was approximately 320 Hz; with 53 holes in the tachometer disk, this corresponds to approximately 360 RPM.
- **Interface:** A 26-pin ribbon cable connecting to the MD-120 disk controller board.

1 This video tutorial illustrates how to replace the drive belts.

To explore replacement options, a temporary adapter cable was created to test a standard Sony 3.5-inch PC floppy drive, carefully following the pin connections for the floppy disk controller as described in the datasheet[2].

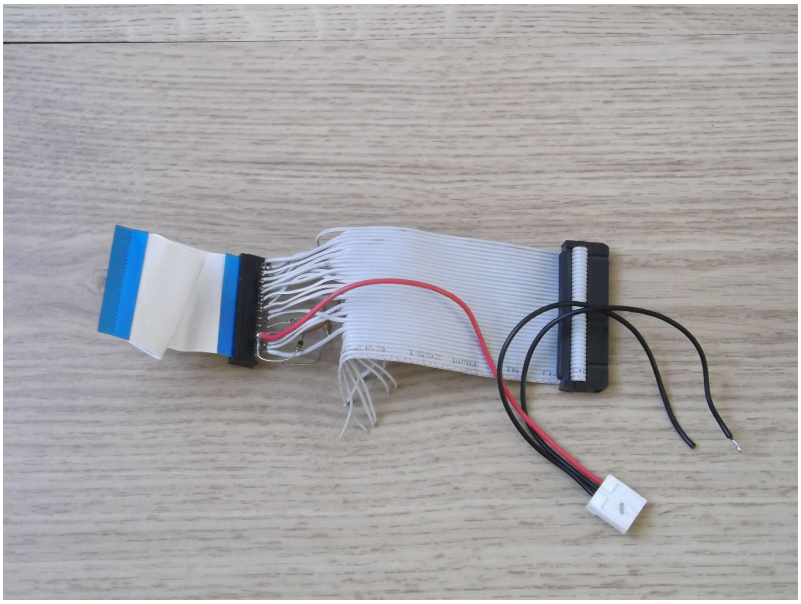

Note the 26-pin ribbon cable (left) harvested from the original drive, ready for a new life.

Flat flexible cables (FFC) and corresponding connectors with a 1.27 mm (1/20 inch) raster were already rare back then, as standard FFC rasters were and still are 1.0 mm and 1.25 mm. Because this part is so rare, harvesting the original FFC directly from the old drive became a necessity.

It didn't immediately work. The original Matsushita drive spins at 360 RPM, the spare drive operated at the standard PC speed of 300 RPM, creating a data transfer rate mismatch. A problem with two solutions.

2 A careful review of this picture shows a few resistors, temporary fixtures during the exploration of solutions to the RPM mismatch problem.

The first approach was to make the 300-RPM replacement drive behave like the original 360-RPM drive.

A beautiful picture of the MD-120, original controller, adapter cable and new drive being tested with a VX-4. A historical picture, because it reflects testing the controller overclocking approach to reaching 360 RPM



Verbatim from the workbench:

“The resistors are temporary and not present in the final adapter. When I couldn't read the 2HD disks, I tried to improve the slew rate of the Read Data signal by additional pull-ups. In the initial version I increased the PC drive rotation speed from 300 rpm to 360 rpm by overclocking its control circuit from 4.0 MHz to 4.8 MHz. However, I didn't have a 4.8 MHz resonator at hand, so I divided the 19.2 MHz floppy controller clock by 4 and fed the resulting 4.8 MHz signal through a voltage divider built with two resistors and a capacitor to the floppy drive board.

The clock frequency divider was built with a 74HC74 dual D-type flip-flop. It's not visible in the photo because it's covered by flat cables.”[3]

3 This circuit is detailed at the end of the document.

Another idea is to patch the MD-120 firmware down to 300 RPM. Because the ROM is socketed, the original ROM could easily be restored if the experiment failed. This line of thinking led the way toward the elegant final solution.

Verbatim from the workbench:

“I have now managed to update the ROM so that the MD-120 works with an unmodified 300 RPM floppy drive. The changed value is consistent with the MAME documentation. However, only 2DD disks work, 2HD not.

Summary of my observations and thoughts:

Neither the original weak American drive nor a PC drive modified to 360 RPM could read 2HD disks.

According to the floppy controller datasheet, 2HD disks at 360 RPM aren't supported by the current hardware configuration, only 300 RPM. The higher rotation speed of 2HD disks requires 38.4 MHz clock frequency instead of present 19.2 MHz.

The ROM code apparently supports 2HD disks, but only at 300 RPM, if the MAME documentation is to be trusted. They can be formatted to a standard size of 1.44 MB or an unusual size of 1.232 MB.

Maybe I should ask the other MD-120 owner if his unit reads 2HD floppy disks.

I think the original ROM supports both 360 RPM and 300 RPM drives, and there must be a jumper somewhere selecting between them. Please look at this short snippet of Z80 code:

```
0591: in0  a,(48)  ;this port also returns the state of the dip switches on bits 3..0
0594: ld   c,0B    ;2DD, 300 RPM
0596: bit  7,a     ;test the jumper selecting the rotation speed
0598: jr   nz,059C ;skip if 300 RPM drive selected
059A: ld   c,CB    ;2DD, 360 RPM
059C: ...
```

It also appears that only 300 RPM drives can read 2HD disks:

```
0586: ld   c,4B    ;2HD, 300 RPM (no other settings)
0588: jr   059C
```

Success!
…

…

The rotation speed selection jumper is marked with a red circle in the attached image. The zero-ohm resistor should be moved from position R19 to R18. Both kinds of disks, 2DD and 2HD, are read without problems.“

This simple modification rendered the ROM patch unnecessary. We mention it here because it directly led to this elegant[4] solution.

A remarkable journey. With a faulty disk drive replaced and a minimalist board modification this MD-120, Yuki (ゆき), is back in service.

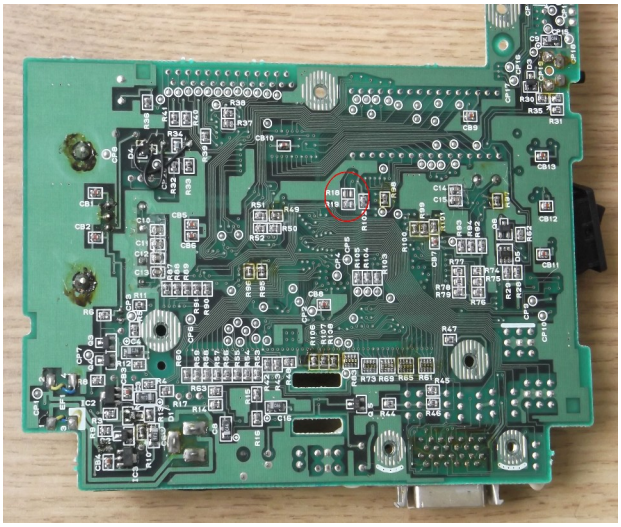

ピオトル様、治してくれてありがとう!
ゆき

4 Pedantically, "parsimonious."

The Missing SB-5

Mariko was missing her SB-5 adapter—a rare piece of vintage electronics. An original, incomplete SB-5 design survives in the archive here. Piotr completed the design and placed the resulting schematic in the same location on his website here.

Archived Design

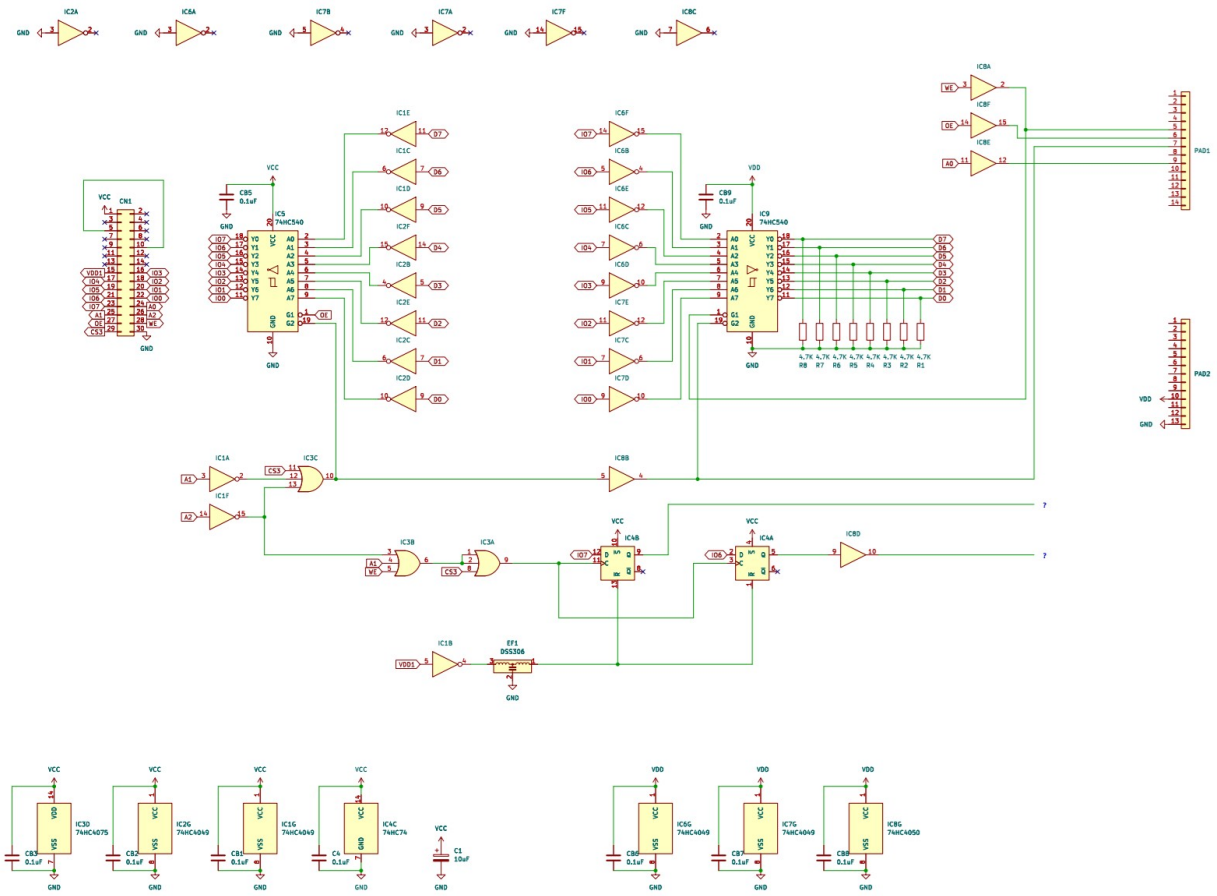

Final Design

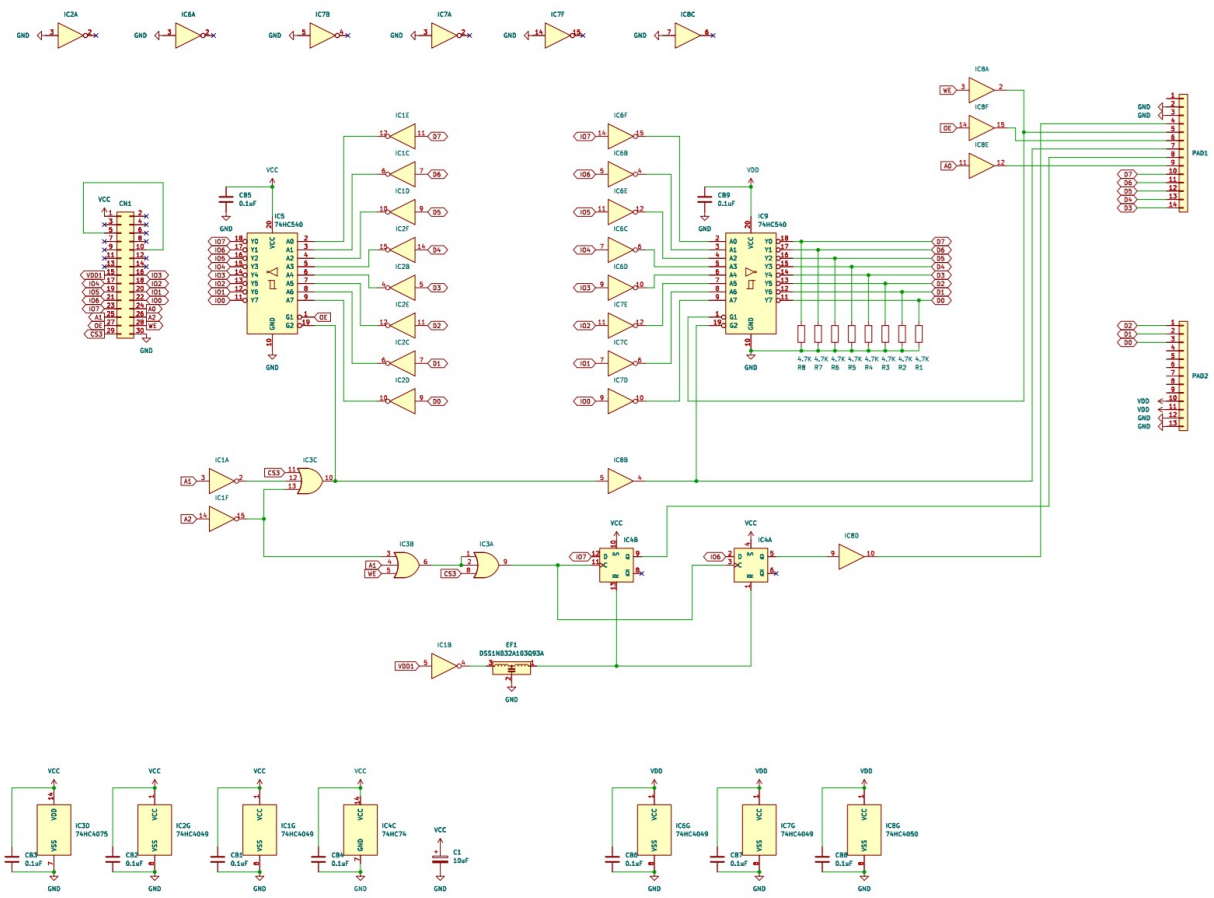

A replica SB-5 was fabricated, as shown in the adjacent pictures.

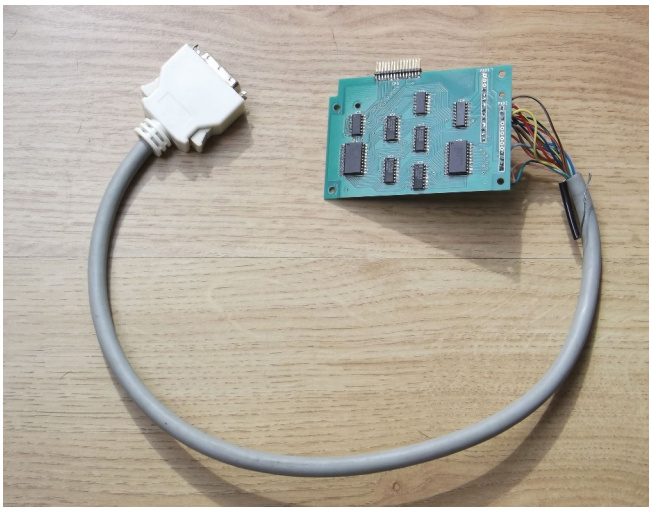

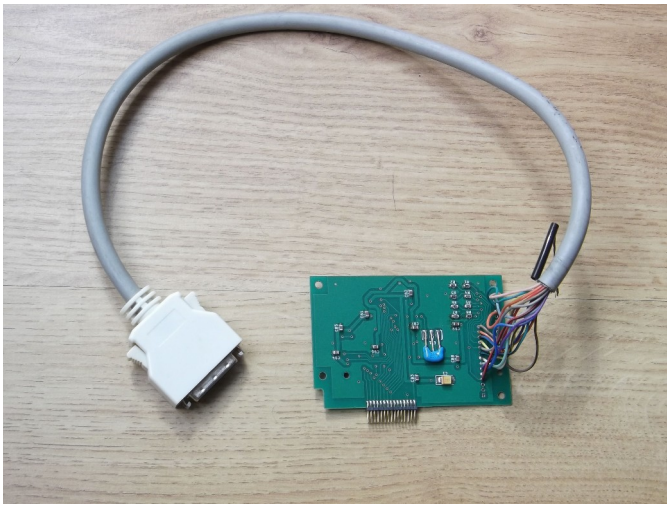

It worked flawlessly on the first attempt.

Fabricating the SB-5 interface, replacing the drive, and patching the RPM selection on the second unit fully restored Mariko (まりこ) to good health.



Where there were once two broken MD-120 units, we now had two fully functional ones.

ピオトル様、治してくれてありがとう!
まりこ

Recapping

As part of the restoration, Piotr replaced the aging electrolytic capacitors, removing another class of age-related failure from the equation.

On the right: a collection of all the replaced original capacitors.

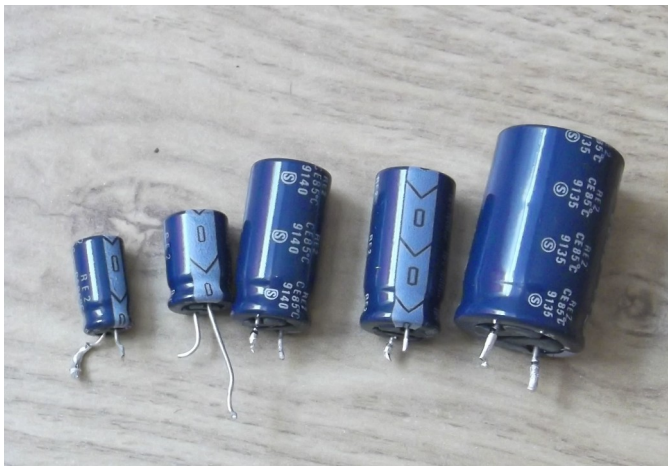

Frequency Division
The experiment to make a 300-RPM drive spin at 360 RPM involved a frequency divider that is not immediately obvious in the original photograph.

These are the schematic and close-up pictures for this circuit.

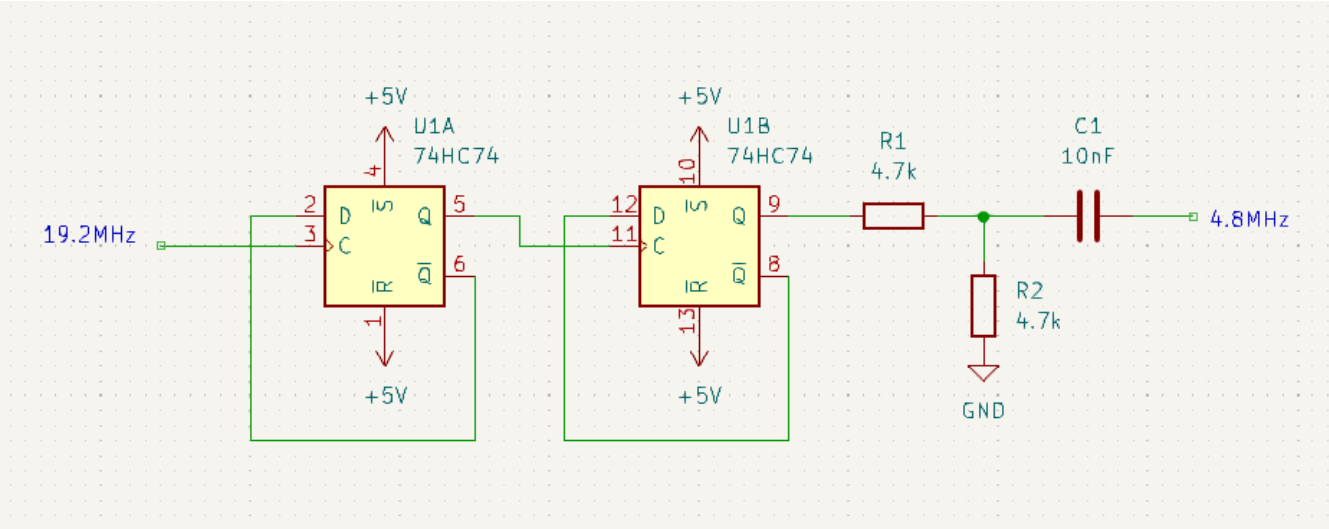

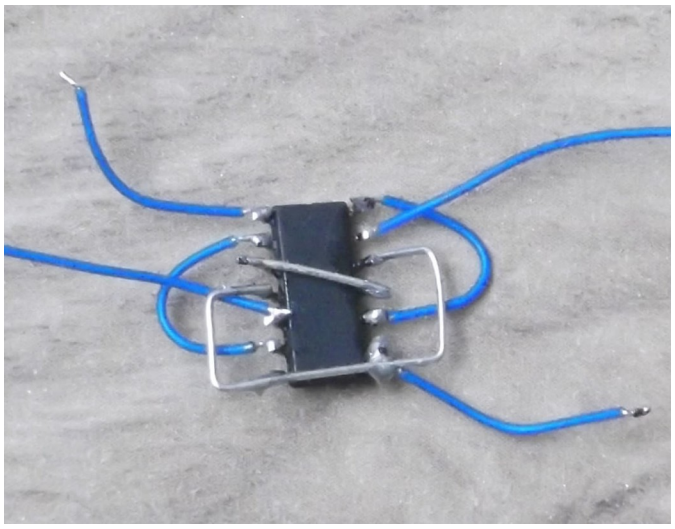

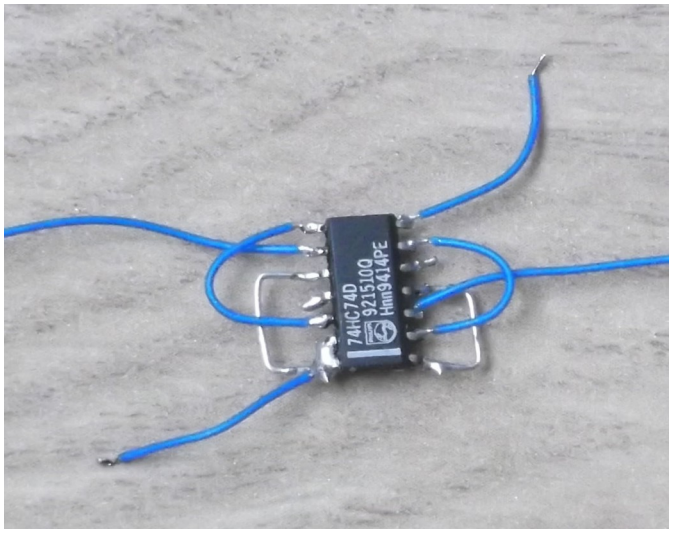

In The End …

Mariko（まりこ） *Szczecin, Poland*



Yuki（ゆき） Brookhaven, USA



Other Family Members





The DSKF command displays the number of free *clusters* (allocation units).

2DD 720KB: cluster size = 1024 bytes
2HD 1.44MB: cluster size = 512 bytes


CASIO
SUPER COLLEGE PERSONAL COMPUTER Z-1
16-Bit CPU
files
FILE1 .C 8
FILE2 .C 10


CASIO
PERSONAL COMPUTER FX-890P
16-Bit CPU
files
FILE1 .C 8
FILE2 .C 10


CASIO
SUPER COLLEGE PERSONAL COMPUTER Z-1GR
16-Bit CPU
files
FILE1 .C 8
FILE2 .C 10

SB-5

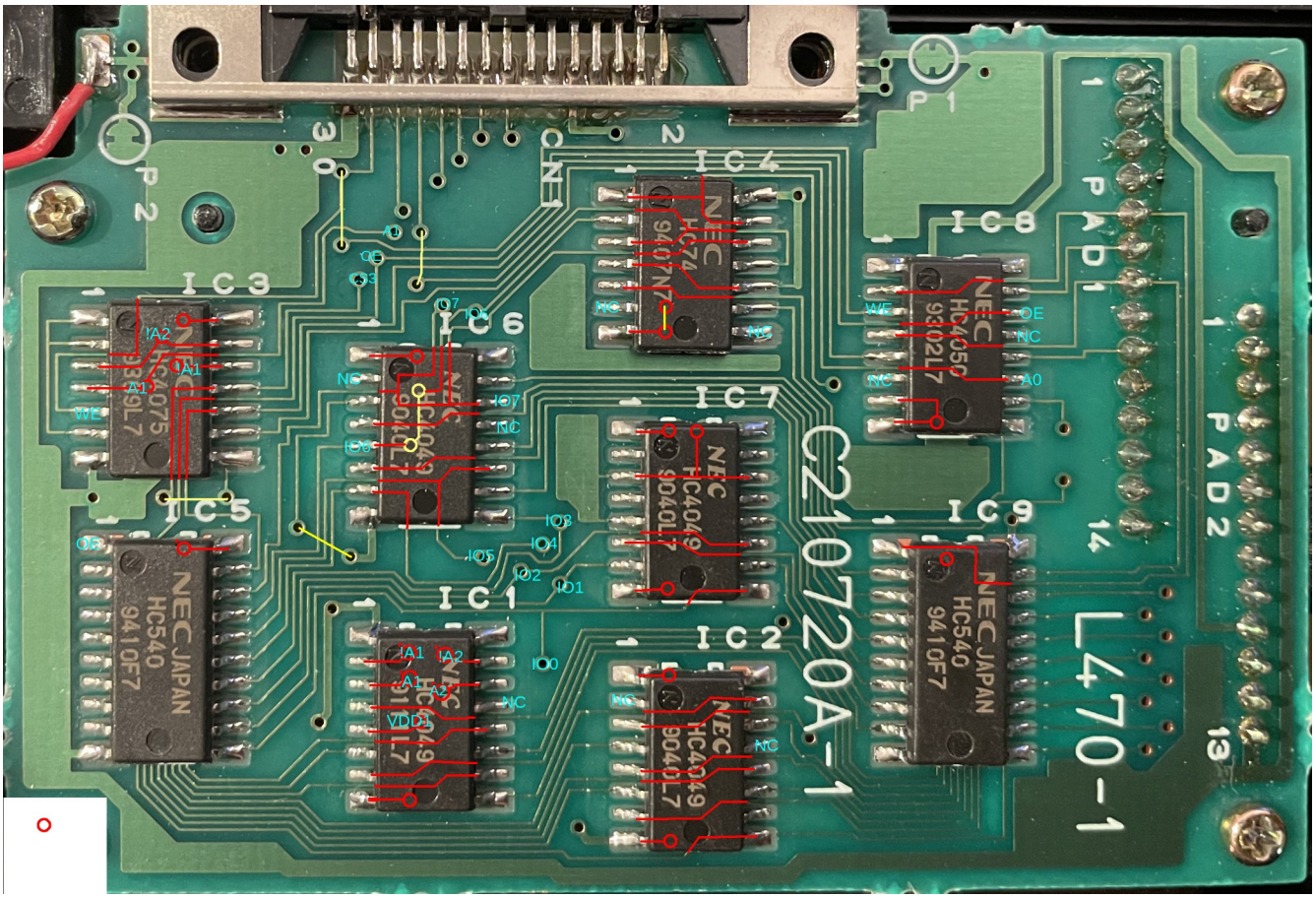
C210720A-1
L470-1
IC1
IC2
IC3
IC4
IC5
IC6
IC7
IC8
IC9
CN1
P1
P2
PAD1
PAD2
NEC JAPAN
HC540
9410F7

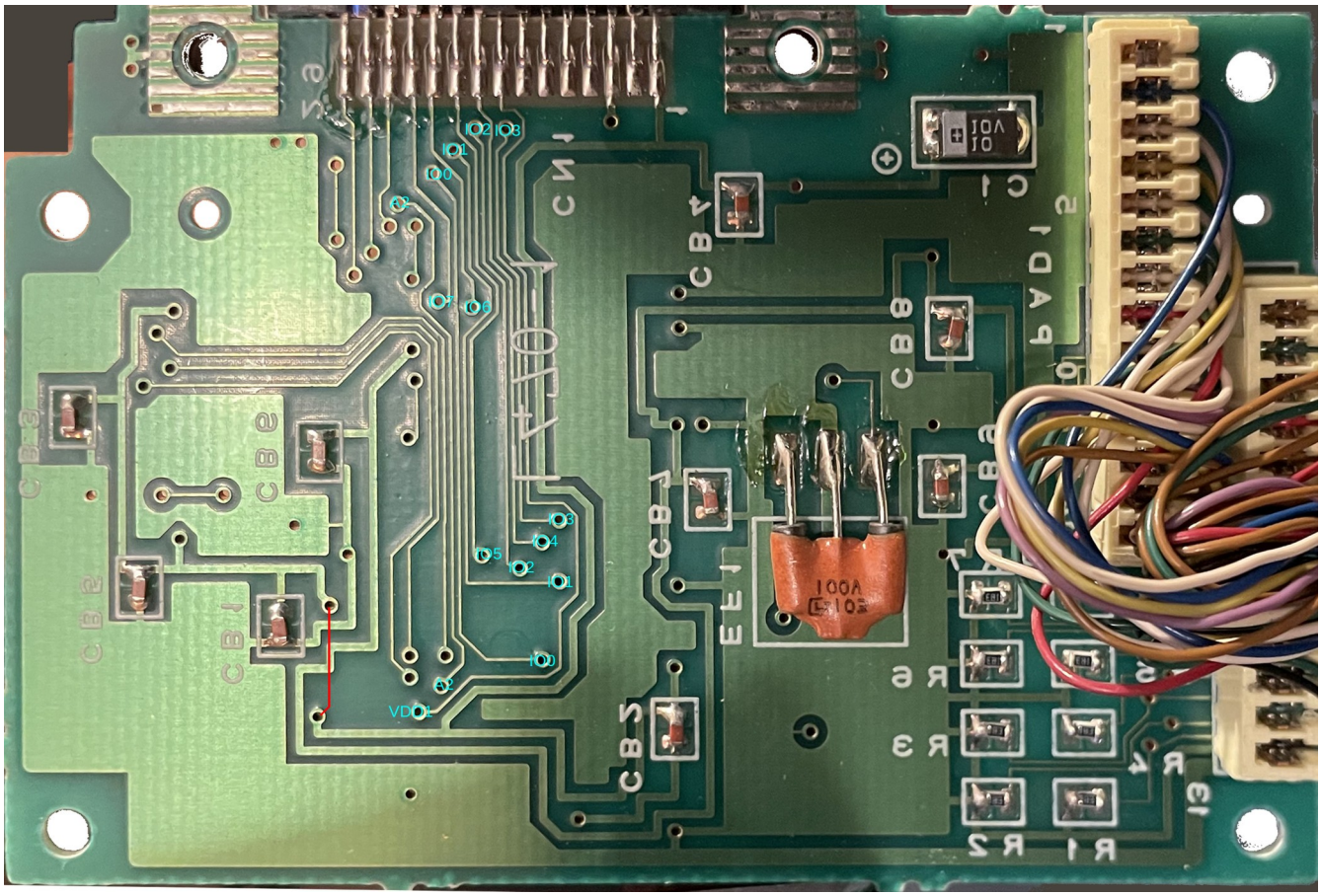
CN1
C210720A-1

Sony MPF920



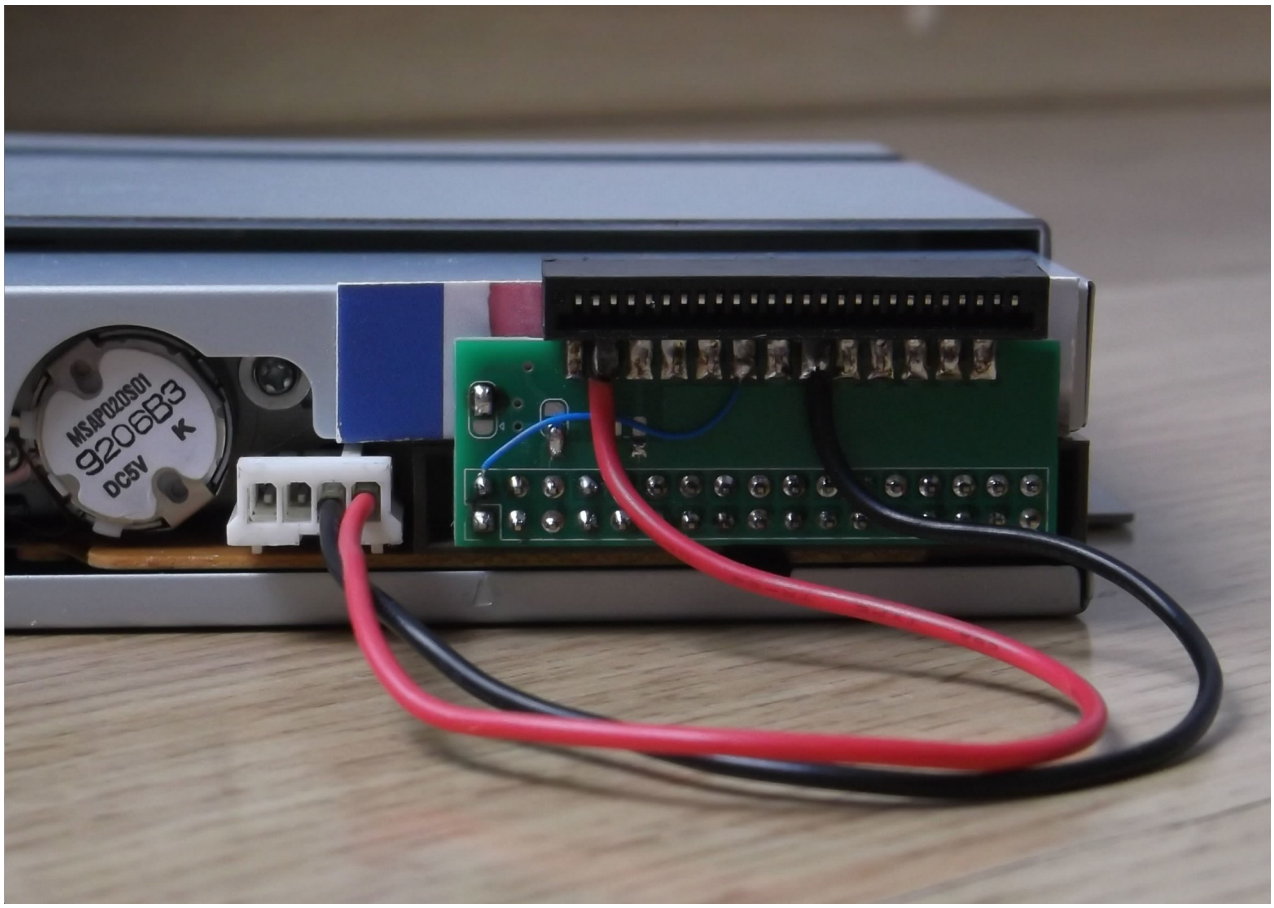

About Power Supplies

There are two types of power supplies:

Older models rely on a traditional linear power supply featuring an iron-core transformer, a rectifier, and a filter capacitor. These units can be safely operated using a step-down transformer. The original Casio AD-4175 uses this design. For the European market, it accepts **220 V AC, 50 Hz, 12 VA** and outputs **7 V DC, 800 mA (center-negative)**. The Japanese version accepts **100 V AC, 50-60 Hz, 12 VA** with the same **7 V DC, 800 mA (center-negative)** output.

Modern switching power supplies (SMPS) are smaller, lighter, produce less heat, and provide regulated output voltage independent of load or input fluctuations. Operating a switching supply through a step-down transformer is redundant and inefficient, as the unit will simply compensate for lower input voltages by drawing higher current. To handle these variations safely, quality units include built-in under-voltage protection. Like the original units, replacement supplies for this hardware must be **center-negative**.

Additional Tests Required

Dip switches on the side. Relevant for formatting, not for reading/writing.
Use different media. 2DD and 2HD.
The behavior for the /6 /9 /M FORMAT parameter on later models.
Test cases to reproduce all documented errors.
Test RS232C.

Additional Reference Material

MD-120 Z1 JP

MD-120 Z1 EN

MD-120 Original ROM image

MD-120-ENG_CD_2232346_A4

3M™ Mini D Ribbon (MDR) Connectors

3M™ Mini D Ribbon (MDR) Connectors

SONY MPF920-Z USER MANUAL

Acknowledgments

This document was produced by Xandrian Labs. 付喪神.

Portions of this document were refined in collaboration with Gemini. All errors are human. This is revision 1.

In accordance with ShareAlike licensing guidelines, this guide incorporates and expands upon community-developed resources. All derivative works must be released under identical license terms to sustain and support the vintage computing community.